PACKAGING REQUIREMENTS	TABLE 1
TYPE	DRAWING PN
BOX	BY SUPPLIER
BAG	N/A
LABEL	N/A
BLISTER	N/A
CLAMSHELL	N/A

FOR-CCD-022-C

REV	DESCRIPTION OF CHANGE	LOC	BY	CHKD	AUTH	DATE
A	RELEASED FOR PRODUCTION	-	HM	ER	PG	AGO/24/17
B	ADDED NOTES 7 & 8	F1	HF	DD	JN	FEB/20/18
C	SCREWS REMOVED		HF	JN	JN	OCT/04/18

SCALE 0.650

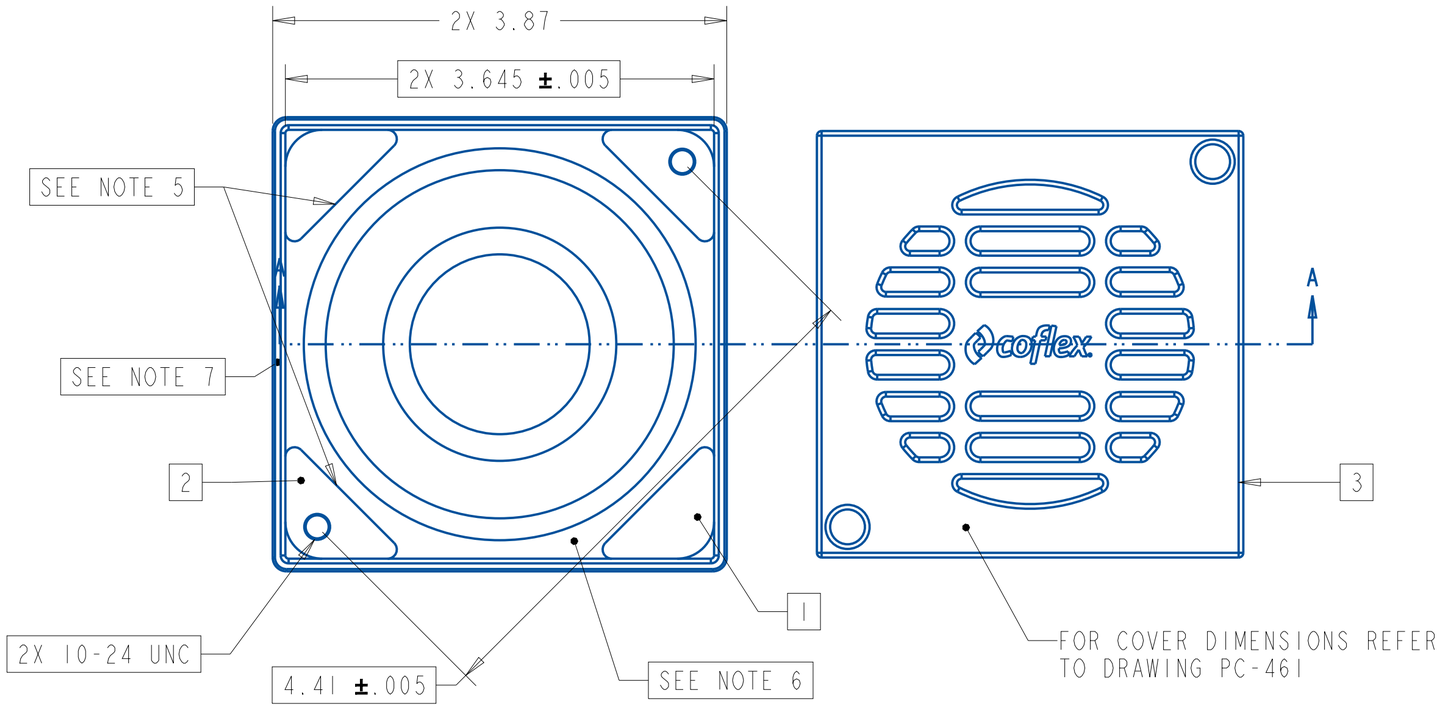

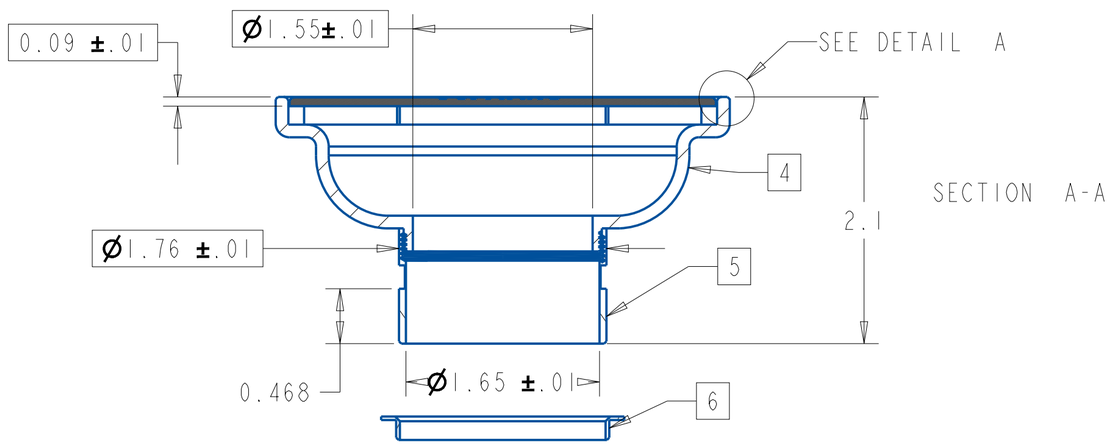

SECTION A-A

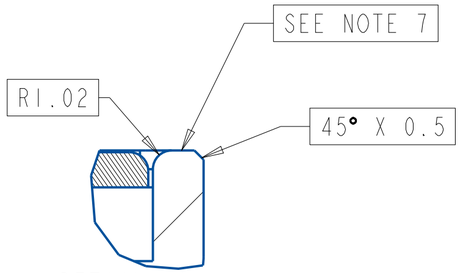

DETAIL A
SCALE 4.000

Revisado
Jaime Noriega - Ingenieria
coflex.

NOTES:
1. UNLESS OTHERWISE SPECIFIED ALL DIMENSIONS ARE IN INCHES
2. FOR PACKAGING REQUIREMENTS: SEE TABLE 1
3. FOR MATERIALS: SEE TABLE 2
4. MUST ASSEMBLE CORRECTLY WITH PC-461 & PC-B120
5. PART 2 & 3 MUST BE WELDED WITH PART 5 AND THE WELDING SPOTS MUST BE COVERED
6. MUST BE FREE OF BURRS, OIL AND EXCESS OF ADHESIVE
7. THIS SURFACE MUST BE POLISHED AND SMOOTH
8. MUST NOT HAVE SHARP EDGES

TABLE 2

NO	DESCRIPTION	REV	MATERIAL	FINISH	QTY
1	BASE	-	SUS304	NATURAL	2
2	THREADED BASE	-		NATURAL	
3	PC-105	A		BA	1
4	BODY	-		BB	
5	LOWER BODY	-		NATURAL	
6	WASHER	-	BY SUPPLIER	BLACK	

Coflex

DESCRIPCION/DESCRIPTION: STAINLESS STEEL SQUARE DRAIN

NOTAS/NOTES: UNLESS OTHERWISE SPECIFIED:
2 PLACE DECIMALS ±.010"
3 PLACE DECIMALS ±.005"
ANGULARITY 0°30'

DIMEMSIONS MAYOR
CRITICAL

MATERIAL: SEE NOTES

ELABORA/DRAW: HM	FECHA ELABORACION/DATE: AGO/24/17
REVISA/CHECK: JN	FECHA REVISION/DATE: OCT/04/18
AUTORIZA/AUTH: JN	FECHA AUTORIZACION/DATE: OCT/04/18

DIBUJO NO./DRAWING NO.: PC-303
REV.: C
ARCHIVO CAD/CAD FILE: PC-303
VOLUMEN/VOL